Transfer Case ATC450

N927 00 02, N927 00 01, N927 00 03

OEM No: 27107643751; 27107643752; 27107643753

Brands

Brand	Modelseries
BMW	X3; X5; X6

List of parts

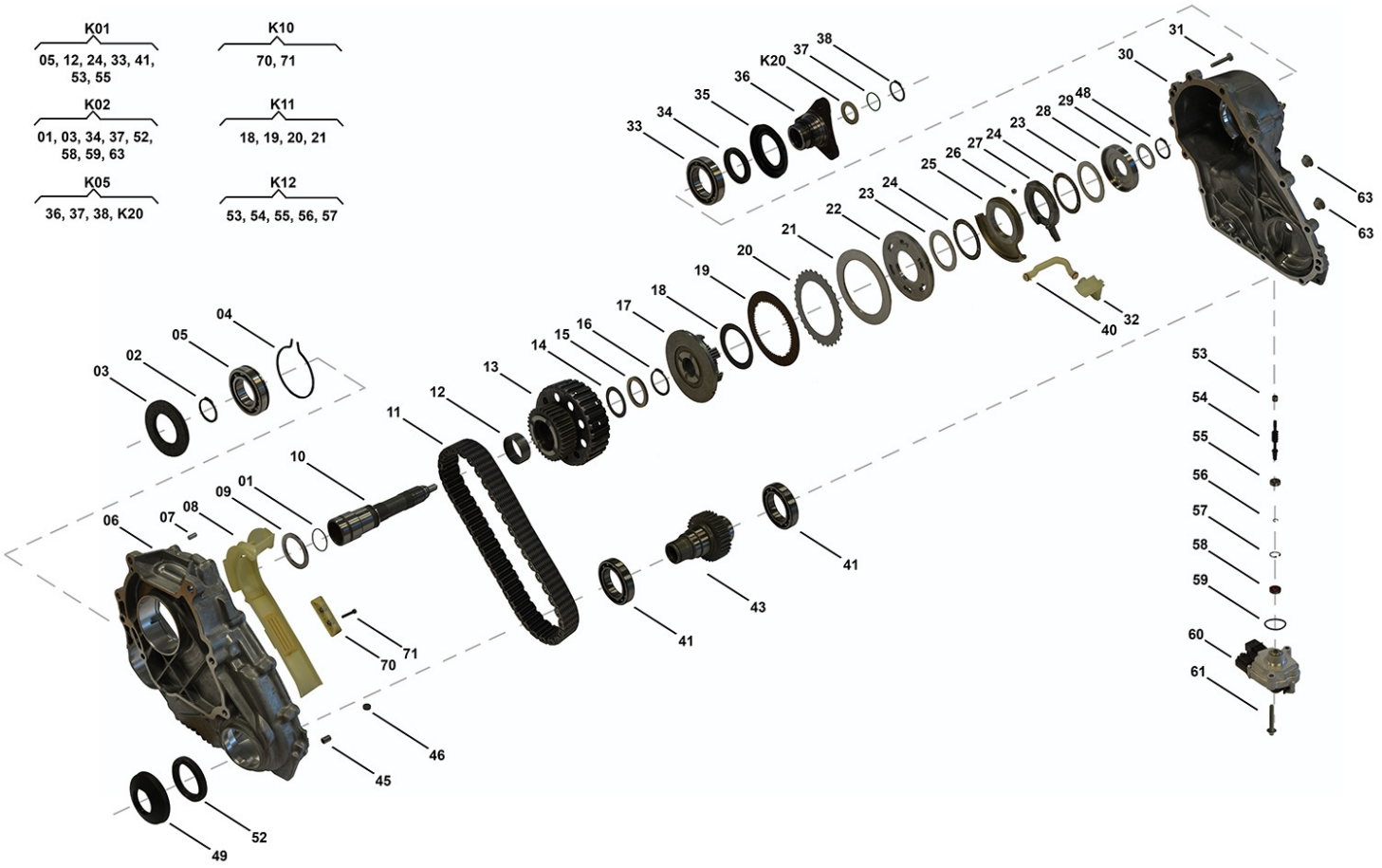

Pos	Part number	OEM no	Quantity	Product name	Info
'K01	SP01497		1 piece	Bearing Kit	Contains position 05, 12, 24, 33, 41, 53, 55
'K02	SP01498		1 piece	Sealing Kit	Contains position 01, 03, 34, 37, 52, 58, 59, 63
'K05	SP01501	27107595650	1 piece	Flange Kit Rear	Contains position 36, 37, 38, K20
'K10	SP01299		1 piece	Sliding Block Kit	Contains position 70, 71 Information for PL72 T Porsche: Used in 95834102011, 95834102012 Information for PL72 T VW: Used in 0BU341010M, 0BU341011C, 0BU341011K, 0BU341011M
'K11	N929 07 01		1 piece	Clutch Kit	Contains position 18, 19, 20, 21
'K12	SP01093		1 piece	Shaft Actuator Kit	Contains position 53, 54, 55, 56, 57
'K20	SP00115	27107546670	1 piece	Shim Set	
01	SP00445	27107609202	1 piece	O-Ring	
02	N901 26 01		1 piece	Locking Ring	

All rights reserved.
This publication may not be reproduced in any form, in whole or in part, without a written approval from JP (Automatic Transmissions) Ltd. Subject to change without notice!

Transfer Case ATC450

N927 00 02, N927 00 01, N927 00 03

OEM No: 27107643751; 27107643752; 27107643753

List of parts

Pos	Part number	OEM no	Quantity	Product name	Info
03	N902 15 01	27107539262	1 piece	Radial Sealing	
04	SP00140		1 piece	Retaining Ring	
05	Only available in K01		1 piece	Ball Bearing	
06	Not available		1 piece	Housing Front	
07	SP00154		1 piece	Pin	
08	Not available		1 piece	Deflector ASM	
09	SP01933		1 piece	Shim	
10	SP01923		1 piece	Input Shaft	
11	SP01717		1 piece	Chain	
12	Only available in K01		1 piece	Needle Bearing	
13	SP01975		1 piece	Gear ASM with Drum Clutch	
14	SP01932		1 piece	Thrust Washer	
15	Not available		1 piece	Shim	
16	SP01034		1 piece	Adjusting Ring	
17	SP01096		1 piece	Hub	
18	Only available in K11		5 pieces	Spring Disc	
19	Only available in K11		7 pieces	Friction Plate	
20	Only available in K11		6 pieces	Steel Plate	
21	Only available in K11		1 piece	Plate	
22	SP01082		1 piece	Piston	
23	SP01083		2 pieces	Shim	
24	Only available in K01		2 pieces	Bearing Cage and Roller	
25	SP01946		1 piece	Actuator Ring Ball Ramp	
26	SP01085		3 pieces	Ball	
27	SP01945		1 piece	Actuator Ring Ball Ramp	
28	SP01084		1 piece	Ring	
29	Not available		1 piece	Shim	
30	Not available		1 piece	Housing Rear	
31	SP01042		14 pieces	Screw	
32	Not available		1 piece	Deflector ASM	
33	Only available in K01		1 piece	Ball Bearing	
34	N922 15 01	27107546667	1 piece	Radial Sealing	
35	SP01499	27107597688	1 piece	Slinger	
36	Only available in K05		1 piece	Flange Rear	
37	SP01037	27107599326	1 piece	Seal O-Ring	
38	SP00112	27107539525; 331381LA0A	1 piece	Retaining Ring	
40	Not available		1 piece	Tube ASM	
41	N905 46 03		2 pieces	Ball Bearing	
43	SP00646		1 piece	Sprocket Output	
44	Only available in K10		2 pieces	Screw	
45	SP00155		2 pieces	Pin	
46	SP00130	05143630AA; A2102760098	1 piece	Magnet	
47	Only available in K10		1 piece	Sliding Block	
48	SP01213		1 piece	Retaining Ring	
49	N905 15 04	27107539212	1 piece	Slinger	
52	N902 15 02	27107539266	1 piece	Radial Sealing	
53	Only available in K01 & K12		1 piece	Needle Bearing	
54	Only available in K12		1 piece	Shaft Actuator	

All rights reserved.
This publication may not be reproduced in any form, in whole or in part, without a written approval from JP (Automatic Transmissions) Ltd. Subject to change without notice!

Transfer Case ATC450

N927 00 02, N927 00 01, N927 00 03

OEM No: 27107643751; 27107643752; 27107643753

List of parts

Pos	Part number	OEM no	Quantity	Product name	Info
55	Only available in K01 & K12		1 piece	Ball Bearing	
56	Only available in K12		1 piece	Retaining Ring	
57	Only available in K12		1 piece	Retaining Ring	
58	SP01038	27107593452	1 piece	Radial Seal Ring	
59	SP01040	27107593451; 95834150100	1 piece	Seal O-Ring	
60	Not available		1 piece	Actuator Motor	
61	SP01045	27107593450; 673002351; 90038507101; 95834150200	2 pieces	Screw	
63	SP00176	33117525064	2 pieces	Plug	
	OIL0005	00004330136; 83220397244; 83222409710	1 piece	Transmission Fluid	Shipment in 1 liter bottles. Fillgrade information please see Oil List.
	SP02000		1 piece	Sealant	Sealant SILICON BLACK (1pce = 300ml)

All rights reserved.
This publication may not be reproduced in any form, in whole or in part, without a written approval from JP (Automatic Transmissions) Ltd. Subject to change without notice!